mira

Flight WALL

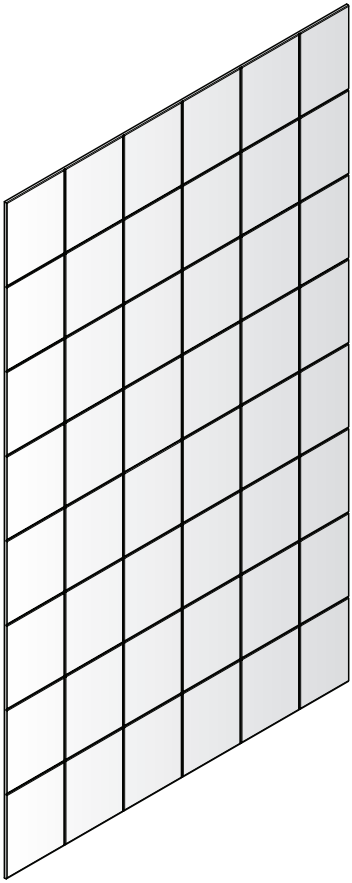

MIRA FLIGHT WALL

Installation and User Guide

These instructions are to be left with the user

INTRODUCTION

Thank you for purchasing a quality Mira product. To enjoy the full potential of your new product, please take time to read this guide thoroughly, having done so, keep it handy for future reference.

Mira Modular Wall Panels

Mira Modular wall panels provide a fast, easy to install, low maintenance, durable and leak free wall panel system. The modular wall panels have been designed to suit most standard shower trays and over the bath installations.

Guarantee

Mira Showers guarantee the Mira Flight Wall against any defect in materials or workmanship for a period of **ten** years from the date of purchase.

For terms and conditions refer to the back cover of this guide.

Recommended Usage	
Domestic	✓
Light Commercial	✓
Heavy Commercial	✓
Healthcare	✓

Patents

Patent Applications:

UK: 0720 339.1
World: PCT/GB2008/003518

DIMENSIONS

Product	Width	Height	Depth
Flight Wall Panel 760	735 mm	2010 mm	8.0 mm
Flight Wall Panel 800	775 mm	2010 mm	8.0 mm
Flight Wall Panel 1200	1175 mm	2010 mm	8.0 mm
Bath Panel	2010 mm	500 mm	8.0 mm
Basin Splashback	600 mm	250 mm	8.0 mm
Nominal Tile Size	200 mm	250 mm	8.0 mm

IMPORTANT SAFETY INFORMATION

Warning!

1. Products manufactured by Mira are safe and without risk provided they are installed, used and maintained in good working order in accordance with our instructions and recommendations.
2. The Mira Modular Wall Panels 735 mm and 775 mm variants are a **'one-person-lift'**.
   The Mira Modular Wall Panel 1175 mm variant will require a **'two-person-lift'**.

Caution!

1. Before Installing **r**ead all of these instructions.
2. Follow all warnings, cautions and instructions contained in this guide.
3 When this product has reached the end of its serviceable life, it should be disposed of in a safe manner, in accordance with current local authority recycling, or waste disposal policy.

   Important! Carefully unpack and check the size. Check for transit damage and report any faults immediately to your supplier. **No claims for the above will be considered after installation**.

INSTALLATION REQUIREMENTS

Installation must be carried out in accordance with these instructions, and must be conducted by designated, qualified and competent personnel.

1. Panel to be stored upright or flat.
2. Walls must be clean, dry and free from dust and in accordance with adhesive manufacturers instructions.
3. Before installing the wall panels, make sure that the shower tray or bath is level.
4. If the panels need cutting or trimming we recommend using a circular saw. The blade should have a minimum 80 teeth or a jigsaw with a grit edged tungsten carbide blade (rough).
5. The corner extrusion can accommodate 7 mm of misalignment.
6. We recommended a good quality strong adhesive such as **Evostik Serious Stuff, Unibond No More Nails** or similar equivalent.
7. We recommend using bathroom quality silicone sealant containing an anti-microbial additive.

   Caution! Care should be taken to protect wall panel corners from damage.

   Caution! When installing the wall panels, care should be taken not to damage the shower tray or bath.

INSTALLATION

Read the section: **Installation Requirements** before proceeding with the installation.

Installing a Single Corner Extrusion (Shower Tray Installation)

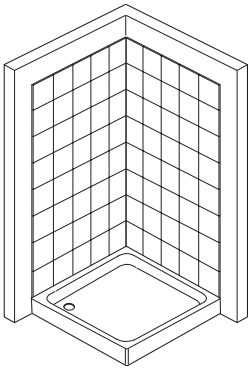

1

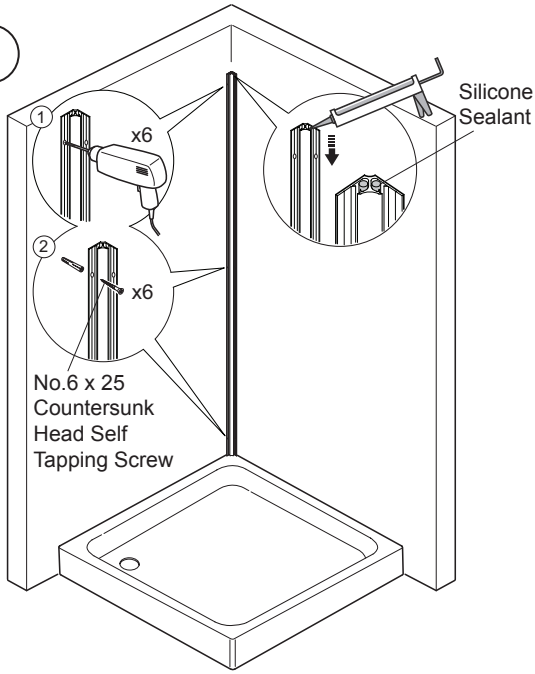

2

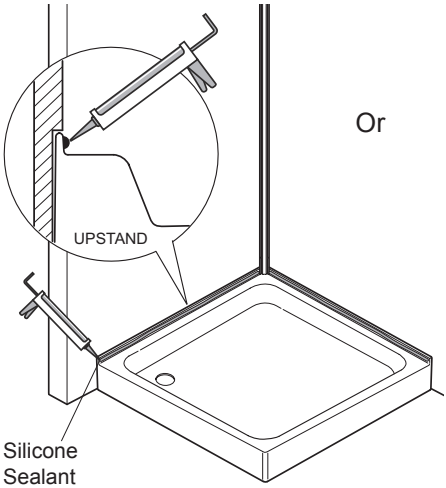

Or

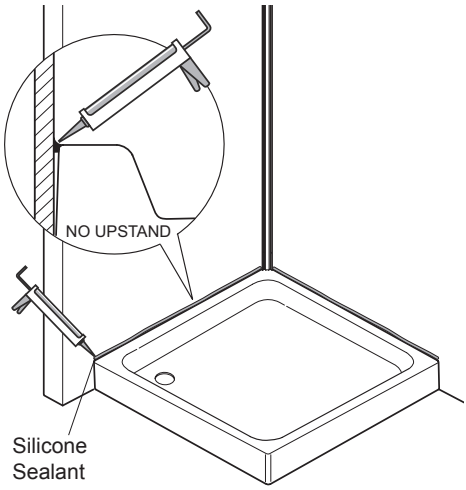

3 Cut any holes required for pipework. Seal the edges around the holes with silicone sealant. Apply the silicone sealant around the edge of the wall panel.

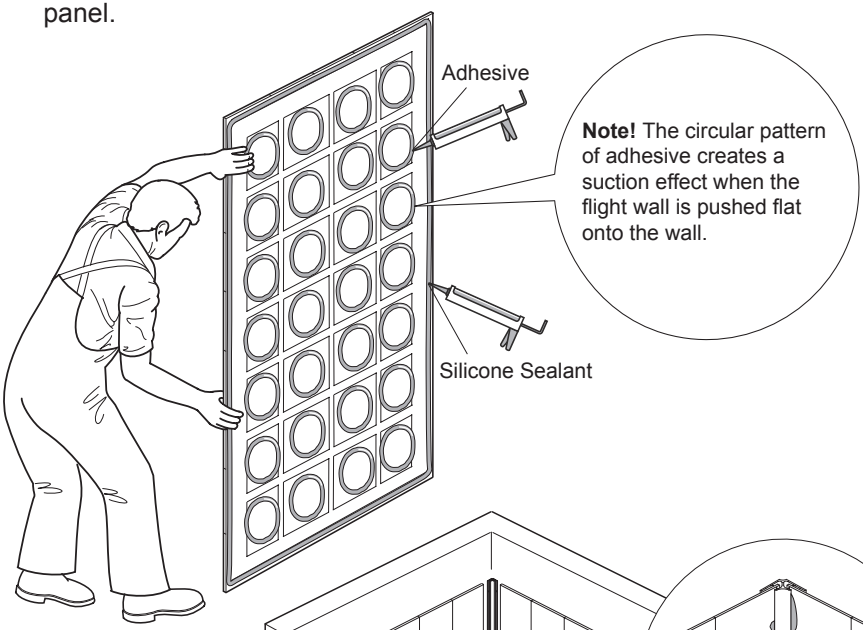

4

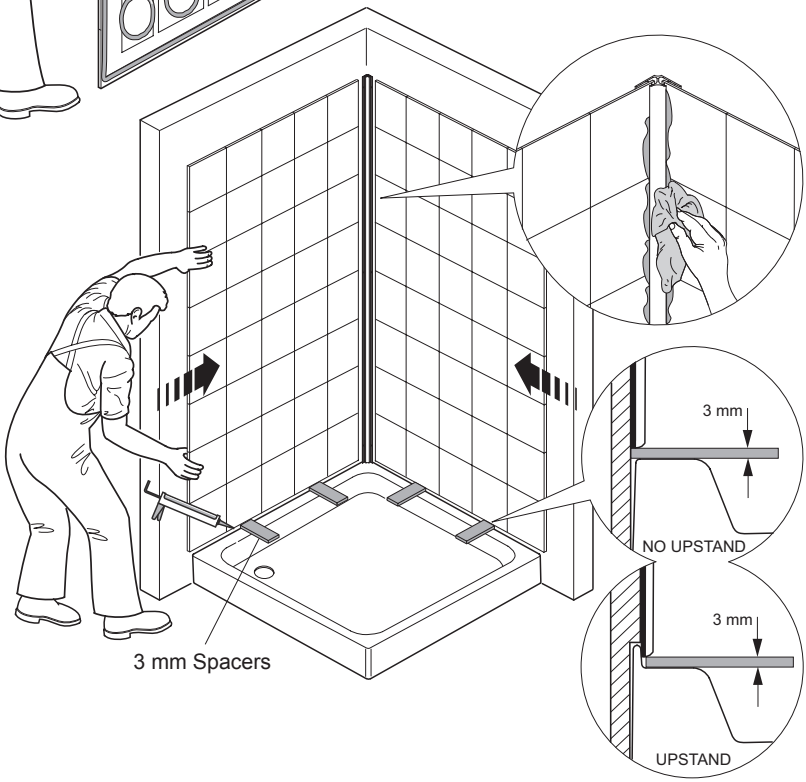

5

Remove the 3 mm spacers once adhesive has cured and seal around the edge with silicone sealant.

Installing a Two Corner Extrusion (Shower Tray Installation)

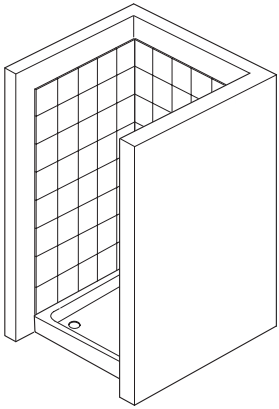

1

Measure the size of the alcove.

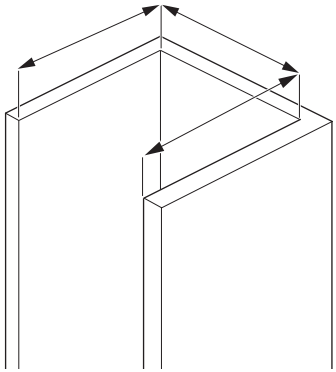

2

Cut the flight wall panels to size, cut any holes required for pipework and seal the edges around the holes with silicone sealant.

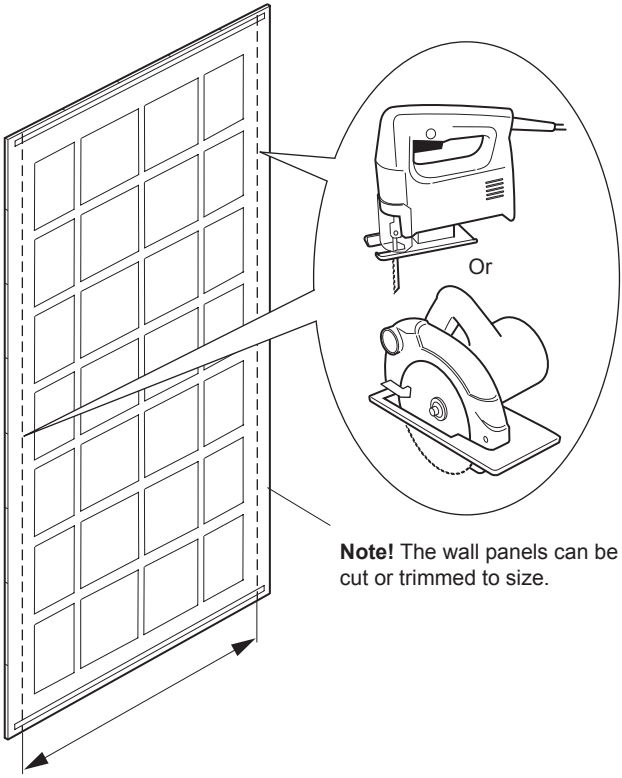

Note! The wall panels can be cut or trimmed to size.

3 Apply the silicone sealant to the corner extrusion and around the edge of the wall panel.

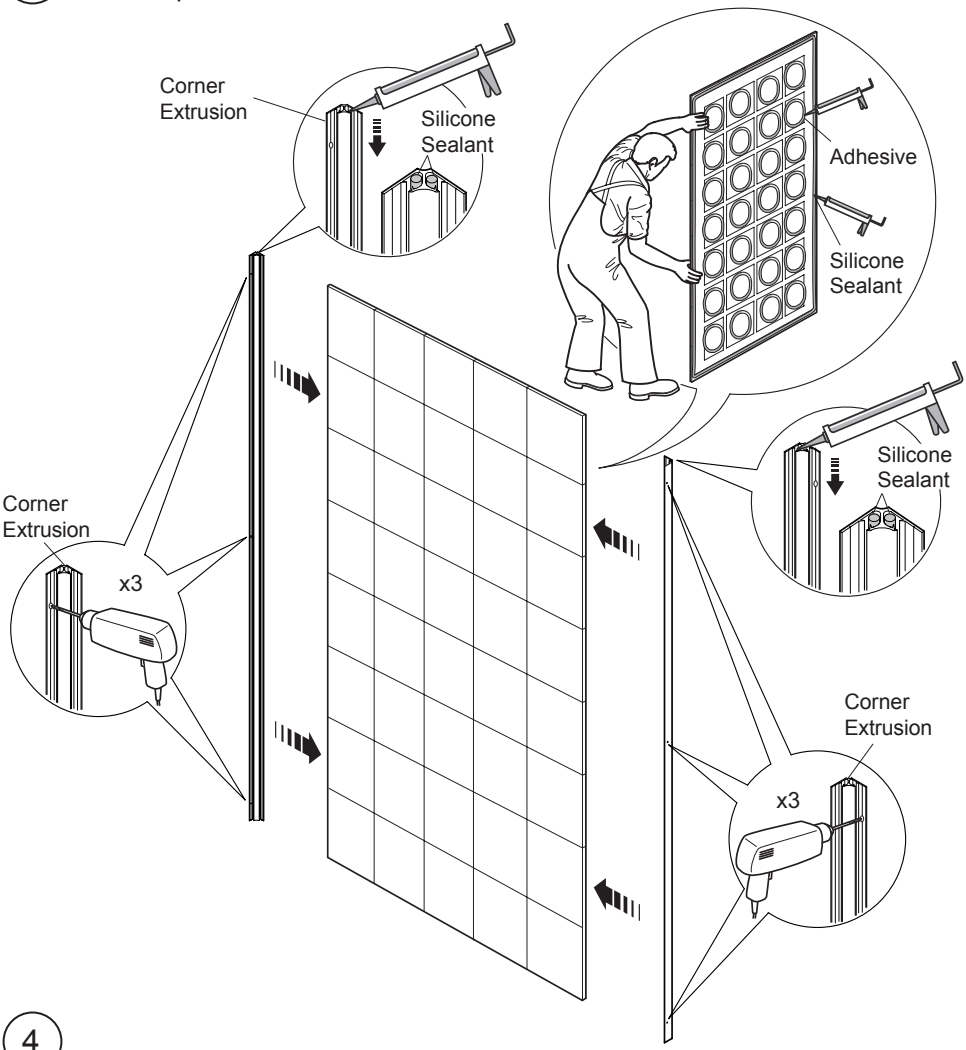

4

Drill 3 holes in each of the corner extrusions for the No.6 x 25 countersunk head self tapping screws.

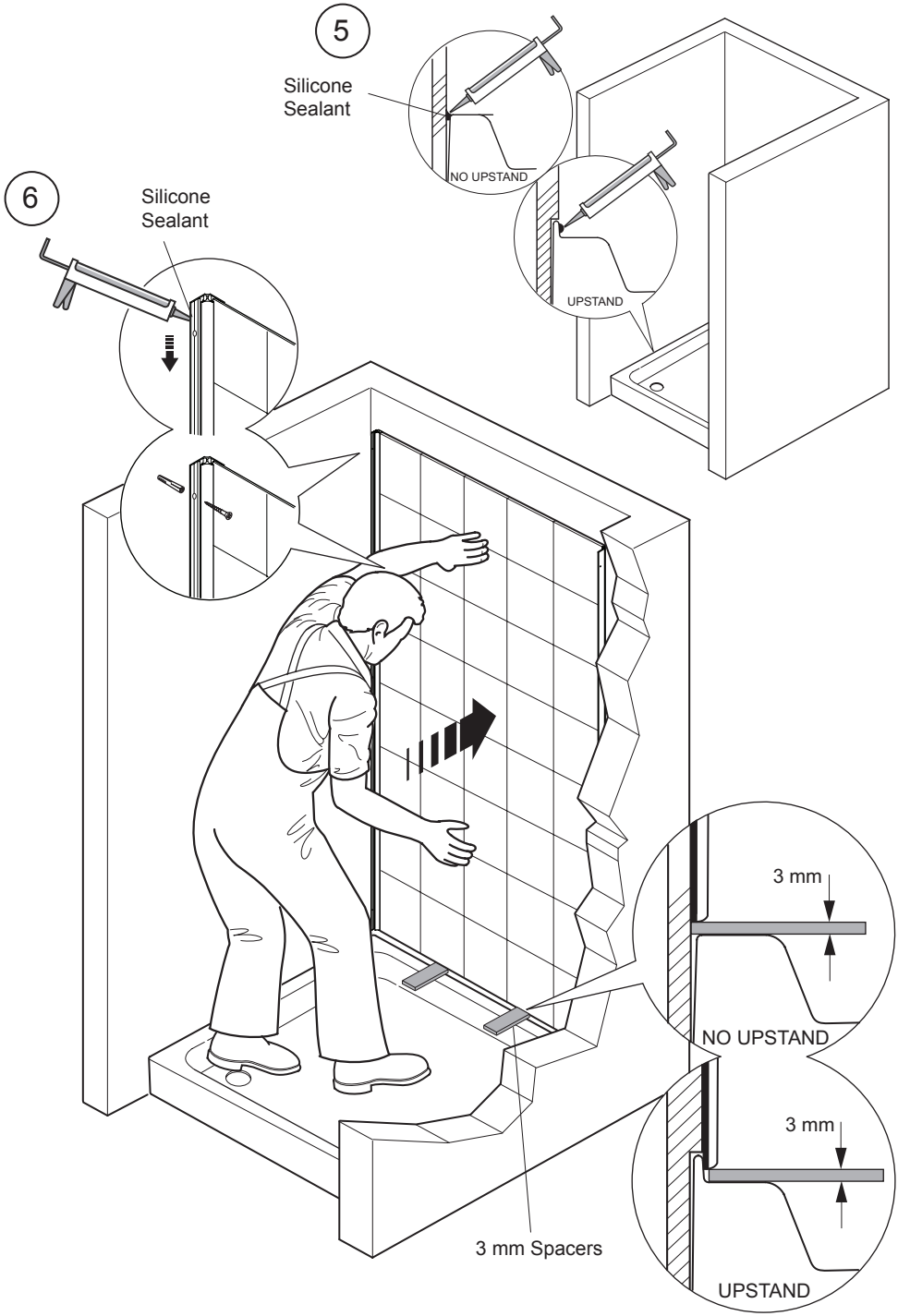
5
Silicone
Sealant
NO UPSTAND
UPSTAND
6
Silicone
Sealant
3 mm
NO UPSTAND
3 mm
UPSTAND
3 mm Spacers

7

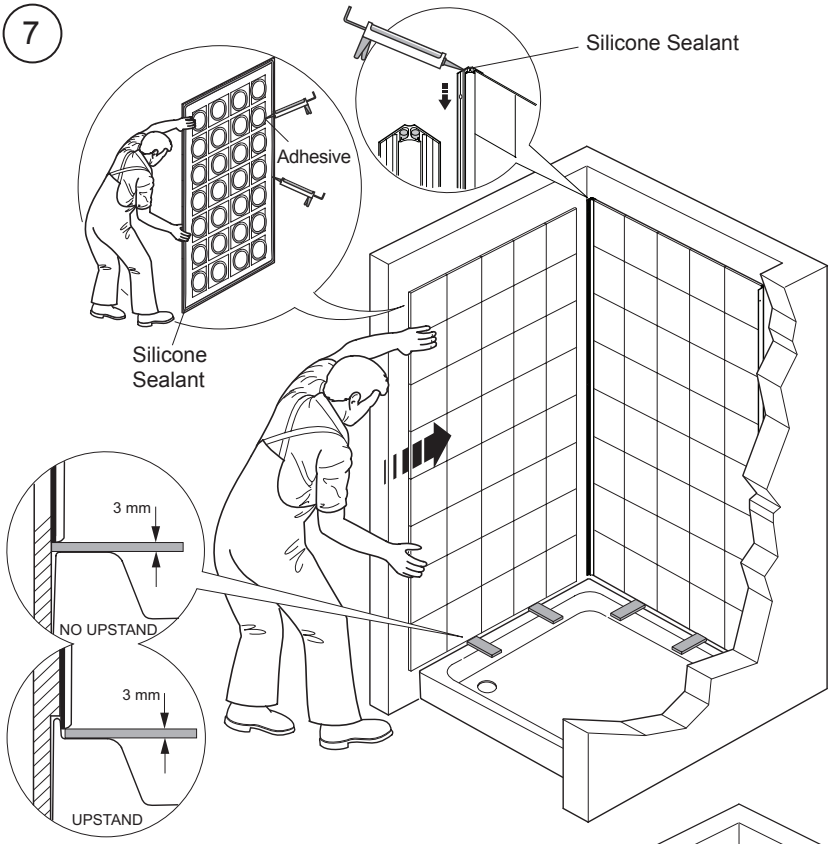

8

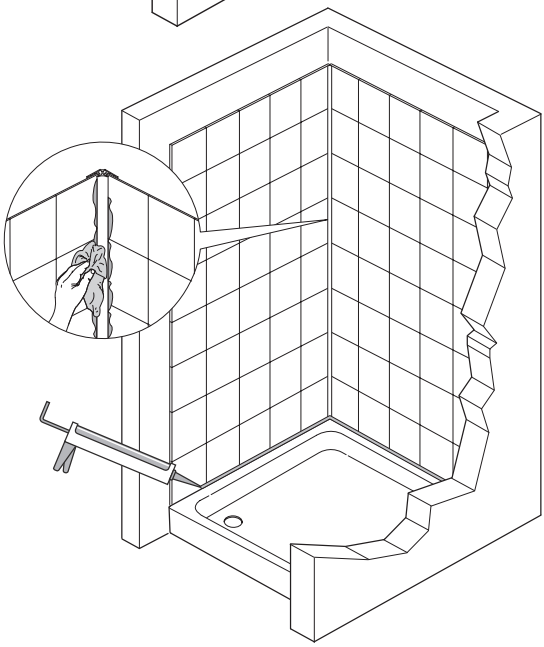

Remove the 3 mm spacers once adhesive has cured and seal around the edge with silicone sealant.

Installing The Bath Panel

1

Cut the bath panels and joining strip to size.

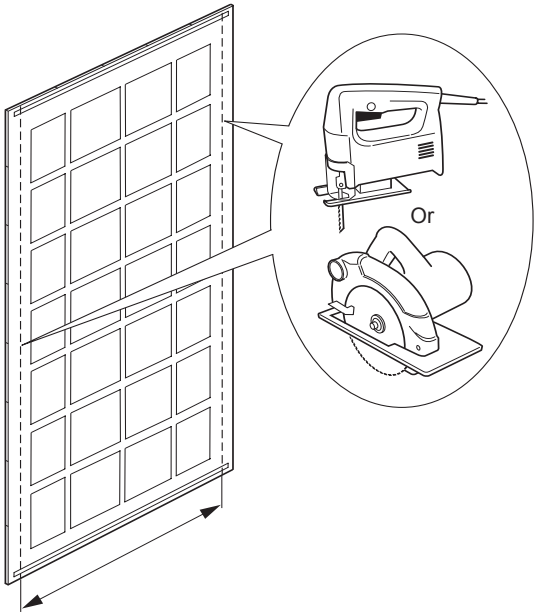

2

Prepare panels with adhesive and silicone sealant as previous installations.

3

Apply silicone sealant to one edge of the joining strip and install onto the wall panel.

Note! Drilling and installing wall screws on the joining strip is optional.

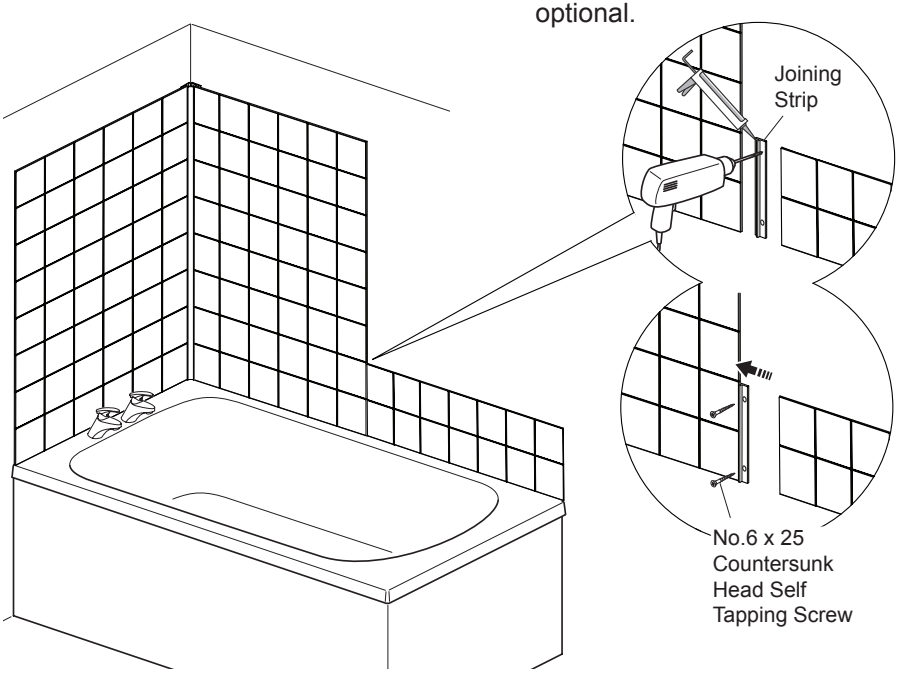

4

Install the wall panels as previous installations.

5

Apply silicone sealant to the joining strip and install the bath panel.

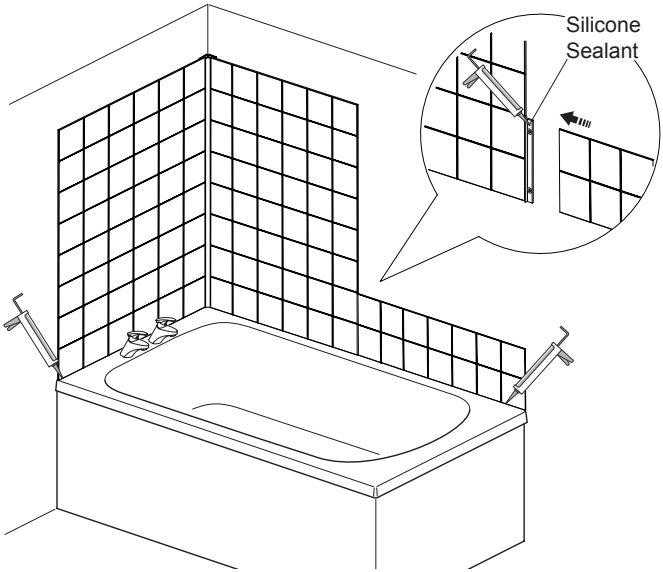

Installing Sink Splashback Panel

1

Prepare the sink splashback as panels and install as previous installations.

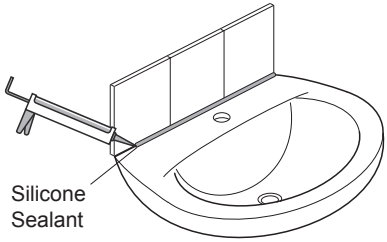

MAINTENANCE

Cleaning

Many household cleaners contain abrasives and chemical substances, and should not be used for cleaning the wall panels. It is advised that the wall panels are cleaned immediately after use to remove any insoluble products. The wall panels should be cleaned with hot soapy water and then the wall panels should be wiped dry using a soft cloth.

The acrylic ABS surface of the wall panels has good resistance properties to acids but should not come into contact with alkalis or organic solvents, such as caustic soda, dry cleaning agents and paint strippers.

ACCESSORIES

1.1669.085.1.0 Corner Extrusion
1.1669.097.1.0 Wall Panel Joining Strip
6.1669.042.1.0 Fixing Kit

CUSTOMER SERVICE

Guarantee

Your product has the benefit of our manufacturer's guarantee which starts from the date of purchase.

To activate this guarantee, please return your completed registration card, visit our website or free phone 0800 0731248 within 30 days of purchase (UK only).

Within the guarantee period we will resolve defects in materials or workmanship, free of charge, by repairing or replacing parts or product as we may choose.

This guarantee is in addition to your statutory rights and is subject to the following conditions:

- The product must be installed and maintained in accordance with the instructions given in this user guide.
- Servicing must only be undertaken by us or our appointed representative. **Note!** if a service visit is required the product must be fully installed and connected to services.
- Repair under this guarantee does not extend the original expiry date. The guarantee on any replacement parts or product ends at the original expiry date.
- For shower fittings or consumable items we reserve the right to supply replacement parts only.

The guarantee does not cover:

- Call out charges for non product faults (such as damage or performance issues arising from incorrect installation, improper use, lack of maintenance, build up of limescale, frost damage, corrosion, system debris or blocked filters) or where no fault has been found with the product.
- Water or electrical supply, waste and isolation issues.
- Compensation for loss of use of the product or consequential loss of any kind.
- Damage or defects caused if the product is repaired or modified by persons not authorised by us or our appointed representative.
- Routine maintenance or replacement parts to comply with the requirements of the TMV 2 or TMV 3 healthcare schemes.

What to do if something goes wrong

If your product does not function correctly when you first use it, contact your installer to check that it is installed and commissioned in accordance with the instructions in this manual.

Should this not resolve the issue, contact our Customer Services Team who will offer you or your installer advice and if applicable arrange for a Service Technician to call.

If the performance of your product declines, check in this manual to see if simple home maintenance is required. If you require further assistance call our Customer Services Team.

Extended Guarantees

A selection of protection plans are available that enable you to cover repair bills for the life of your policy (excludes Eire). Ring 01922 471763 for more details.

Helpdesk Service

Our dedicated Customer Services Team is comprehensively trained and can offer help and advice, spare parts, accessories or a service visit. We will need you to have your model name or number, power rating (if applicable) and date of purchase. As part of our quality and training programme calls may be recorded or monitored.

Mira Showers Website (www.mirashowers.co.uk)

From our website you can register your guarantee, download additional user guides, diagnose faults, purchase our full range of accessories and popular spares, refer to our FAQ's and request a service visit.

Spares and Accessories

We maintain extensive stocks of genuine spares and accessories and aim to provide support throughout the product's expected life. Payment can be made by phone at time of order using most major Credit or Debit cards and we aim to despatch orders within two working days. Items purchased from us are guaranteed for 12 months from date of purchase. For safety reasons spares exposed to mains voltages should only be fitted by competent persons.

Returns – items can be returned within one month of date of purchase, providing that they are in good condition and the packaging is unopened. Please obtain authorisation from our Customer Services Team before return. We reserve the right to apply a 15% restocking charge.

Service / Repairs

We have a nationwide team of Service Technicians who can carry out all service or repair work to your product within the guarantee period and beyond. You have the assurance of a fully trained Mira Technician, genuine Mira spare parts and a 12 month guarantee on any chargeable work done.

Payment should be made directly to the Service Technician who will accept most major Credit or Debit cards.

To Contact Us

UK

Telephone: 0844 571 5000

Mon to Fri 8:00 am - 5:30 pm, Sat 8:30 am - 3:30 pm

E-mail: technical@mirashowers.com

Fax: 01242 282595

By Post: Mira Customer Services Dept, Cromwell Road, Cheltenham, Gloucestershire, GL52 5EP

Eire

Telephone: 01 459 1344

Mon to Fri 9:00 am - 5:00 pm

E-mail: sales@modernplant.ie

Fax: Dublin 01 459 2329

By Post: Modern Plant Ltd (Dublin),
Otter House, Naas Road, Clondalkin, Dublin 22

Mira is a registered trade mark of Kohler Mira Limited.

The company reserves the right to alter product specifications without notice.

FM 14648

© Kohler Mira Limited, August 2009